MOS CAPACITANCE

$$i(j\omega) = V(j\omega)/Z(j\omega) = j\omega C\, V(j\omega)$$

$$Z = \frac{1}{j\omega C}$$

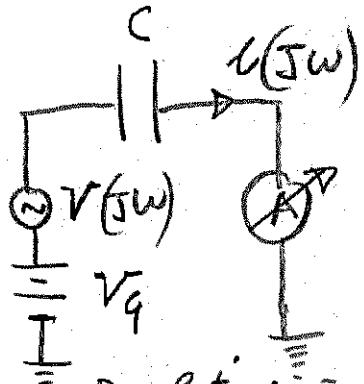

$$i_{RMS} = \omega C V_{RMS} \Rightarrow C = \frac{i_{RMS}}{\omega V_{RMS}}$$

1) $V_G < 0$ $\quad C_{m^2} = \dfrac{\varepsilon_i}{t_i}$ $\quad \varepsilon_i = \varepsilon_0 \varepsilon_{[SiO_2]}$, $\varepsilon_s = \varepsilon_0 \varepsilon_{[Si]}$

2) $V_G > 0$ $(V_G < V_T)$ $\quad C_{m^2} = \dfrac{1}{\dfrac{t_i}{\varepsilon_i} + \dfrac{W}{\varepsilon_s}} = \dfrac{\varepsilon_i \varepsilon_s}{t_i \varepsilon_s + W \varepsilon_i}$

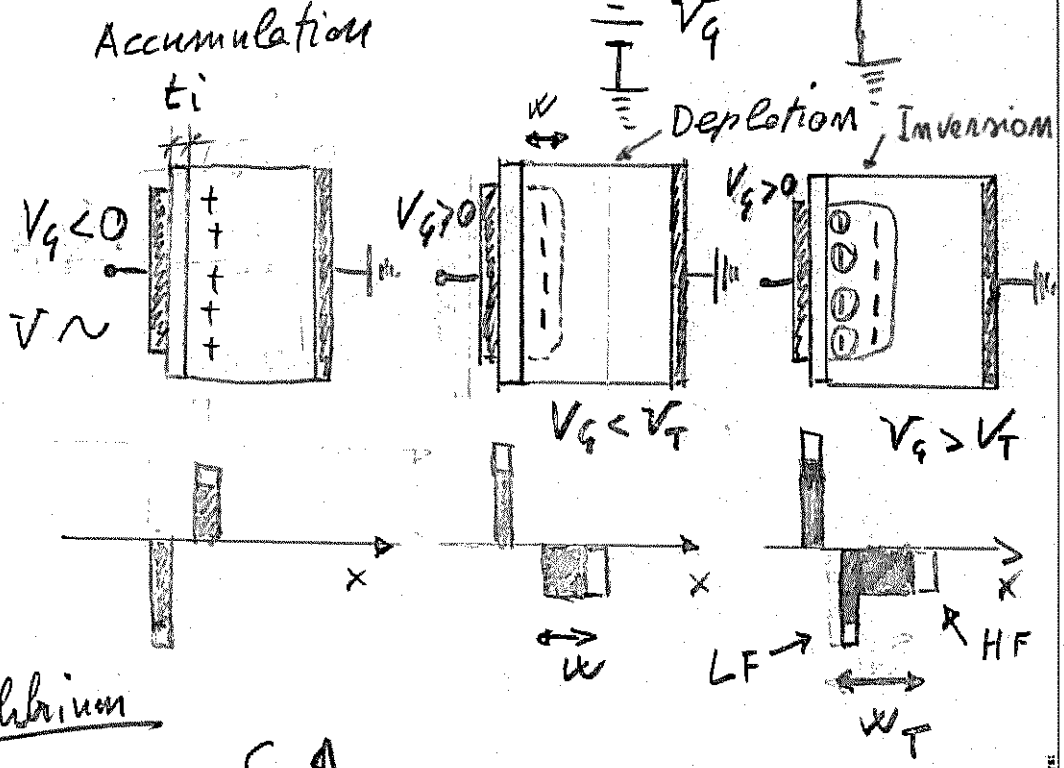

3a) $V > V_T$ Low Frequency

$$C_{m^2} = \varepsilon_i / t_i$$

3b) $V_G > V_T$ High Frequency

$$C_{m^2} = \frac{\varepsilon_i \varepsilon_s}{t_i \varepsilon_s + W_T \varepsilon_i}$$

Equilibrium

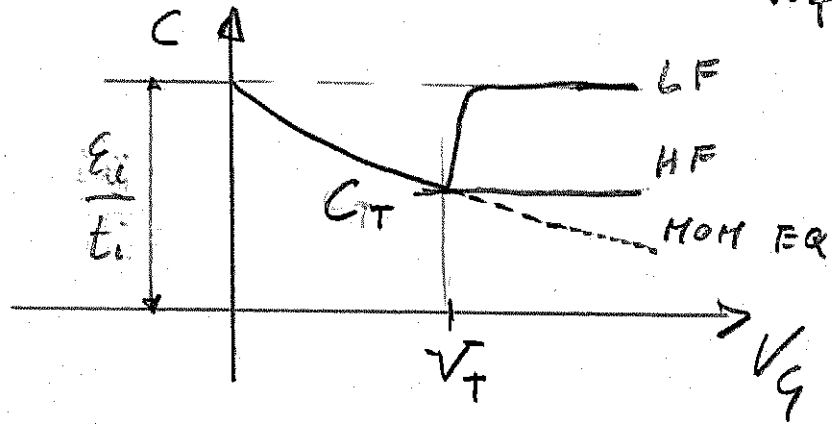

4) $V_G > V_T$ $\quad t = 0^+$ Non equilibrium

$$C = \frac{\varepsilon_i \varepsilon_s}{t_i \varepsilon_s + W \varepsilon_i} \qquad V_G \uparrow \quad W \uparrow \quad C \downarrow$$

GoPhoton! An Initiative of: Funded by: GoPhoton! Partners: Imperial College London

APPROXIMATE ANALYSIS OF THE MOS CAPACITOR

Depletion Regime

$$\phi(x) = \left[E_{v\,bulk} - E_v(x)\right]/q \qquad \phi(x) > 0 \quad \forall x$$

$$\nabla \cdot \vec{\mathcal{E}} = \frac{d\mathcal{E}}{dx} = \rho/\varepsilon = -q N_a/\varepsilon_s \qquad \text{Gauss law}$$

$$\mathcal{E}_s(x) = \int_W^x -q N_a/\varepsilon_s \, dx = q\frac{N_a W}{\varepsilon_s}\left(1 - \frac{x}{W}\right) \qquad \mathcal{E}_i = \mathcal{E}_s(0^+)\frac{\varepsilon_s}{\varepsilon_i} = q\frac{N_a W}{\varepsilon_i}$$

$$\phi(x) = -\int_W^x \mathcal{E}_s(x)\,dx = q N_a (W - x)^2/2\varepsilon_s \qquad \phi_s = \phi(0) = q\frac{N_a W^2}{2\varepsilon_s}$$

$$V_i = \mathcal{E}_i t_i = q\frac{N_a W}{\varepsilon_i} t_i \qquad V_G = \phi_s + V_i = \dots$$

$$W = \frac{\varepsilon_s}{C_i}\left(\sqrt{1 + \frac{2 V_G C_i^2}{q \varepsilon_s N_a}} - 1\right) = \frac{\varepsilon_s}{C_i}\left(\sqrt{1 + 2V_G/V_0} - 1\right) \qquad \left[V_0 = \frac{q\varepsilon_s N_a}{C_i^2}\right]$$

$$C = \frac{C_i}{\sqrt{1 + 2V_G/V_0}}$$

V_0 sets the voltage scale for capacitance change in MOS capacitors

$$\left[C = \frac{1}{t_i/\varepsilon_i + W/\varepsilon_s}\right]$$

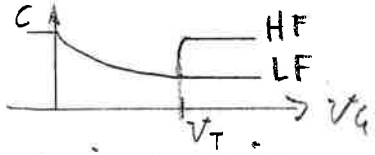

Threshold for strong inversion

$$n(x) = \frac{n_p}{p} = \frac{n_i^2}{N_a}\exp\left(q\frac{\phi(x)}{kT}\right)$$

$$n(0) = \frac{n_i^2}{N_a}\exp\left(q\frac{\phi_s}{kT}\right) \underset{INV}{=} N_a \Rightarrow \phi_s = \frac{kT}{q}\log\left(\frac{N_a^2}{n_i^2}\right)$$

$$\phi_{s\,INV} = 2\frac{kT}{q}\log(N_a/n_i) \quad \text{depends on } T \text{ and } N_a$$

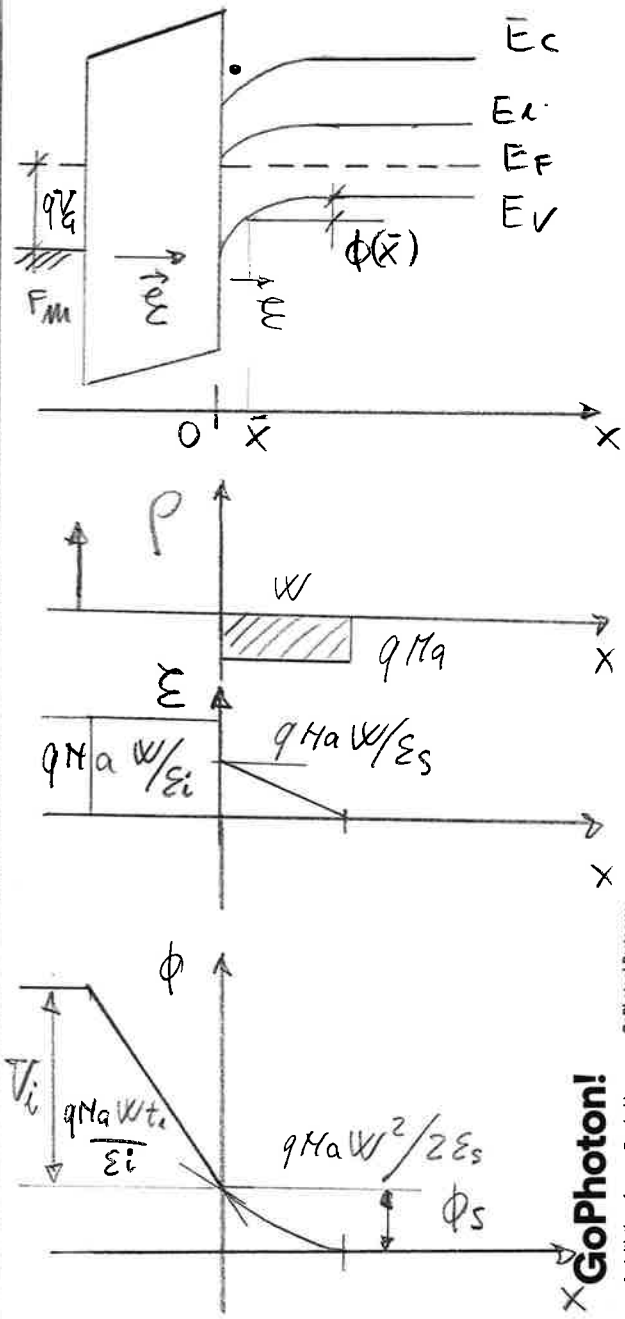

GoPhoton!
An Initiative of: ECOP
Funded by:
GoPhoton! Partners: ICFO, Imperial College London, Vrije Universiteit Brussel, Leibniz Ferdinand-Braun-Institut, Politecnico Milano 1863, Institut d'Optique Graduate School, KIT Karlsruhe, Laser Centre

In the bulk

$$p = n_i \exp\left(\frac{E_i - E_F}{kT}\right) = N_a$$

$$[E_i - E_F]_{bulk} = kT \log(N_a/n_i)$$

$$\phi_{SINV} = 2\frac{kT}{q}\log(N_a/n_i)$$

$$\phi_{SINV} = 2\frac{[E_i - E_F]_{bulk}}{q}$$

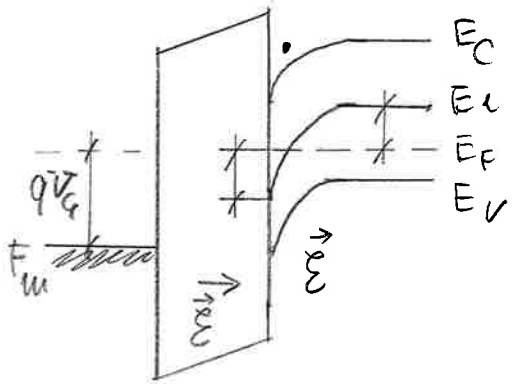

$$\phi_{INV} = \frac{q N_a W_T^2}{2\varepsilon_S} \Rightarrow W_T = \sqrt{\frac{2\varepsilon_S \phi_{INV}}{q N_a}}$$ @ Threshold

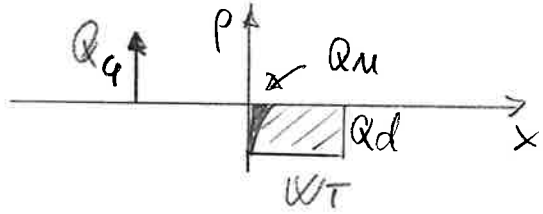

$$V_T = V_i + \phi_{INV} = \underbrace{q N_a W_T}_{\varepsilon_i}\frac{t_i}{\varepsilon_i} + \phi_{INV} = 1/C_i\sqrt{2 q \varepsilon_S N_a \phi_{INV}} + \phi_{INV}$$

$$[V_0 = q\varepsilon_S N_a / C_i^2] \Rightarrow V_T = \sqrt{2 V_0 \phi_{INV}} + \phi_{INV}$$

V_T depends on known parameters

$C_i \simeq 7\cdot10^{-4}\ F/m^2$	$\phi_{INV} = 0{,}7\,V$	$W_T = 300\,nm$	$V_T = 1{,}39\,V$	$V_0 = 0{,}35\,V$

Silicon, $N_a = 10^{22}\,m^{-3}$ $t_i = 50\,nm$

$V_{FB} = -0{,}7\,V$ Polysilicon

$\Rightarrow V_T \simeq 0{,}7\,V$ @ 300 K

GoPhoton! An Initiative of: ECOP Funded by: GoPhoton! Partners: ICFO Imperial College London Vrije Universiteit Brussel Leibniz Ferdinand Braun-Institut Politecnico Milano 1863 Institut d'Optique Graduate School Laser Centre

APPROXIMATE ANALYSIS OF MOS CAPACITOR

Old

Depletion Regime (Equilibrium)

$\forall x \rightarrow \phi(x) = [E_v(\text{bulk}) - E_v(x)]/q \quad [\phi(x) > 0]$

$\nabla \cdot \vec{E} = \frac{dE_x}{dx} = \rho/\varepsilon = -q\frac{N_a}{\varepsilon_s}$ Gauss law

$E_s(x) = q\frac{N_a W}{\varepsilon_s}\left(1 - \frac{x}{W}\right) \qquad E_i = E_s(0^+)\frac{\varepsilon_s}{\varepsilon_i} = q\frac{N_a W}{\varepsilon_i}$

$\int_0^W \rightarrow \phi_s = q\frac{N_a W}{\varepsilon_s}\frac{W}{2} \qquad V_i = E_i t_i = q\frac{N_a W}{\varepsilon_i} t_i$

$V_G = \phi_s + V_i \Rightarrow W = \frac{\varepsilon_s}{C_i}\left(\sqrt{1 + \frac{2V_G C_i^2}{q\varepsilon_s N_a}} - 1\right)$

$[C = 1/(t_i/\varepsilon_i + W/\varepsilon_s)] \quad [C_i = \varepsilon_i/t_i]$

$C = C_i/\sqrt{1 + 2V_G/V_0} \qquad [V_0 = q\varepsilon_s N_a/C_i^2] \quad [C_i = \frac{\varepsilon_i}{t_i}]$

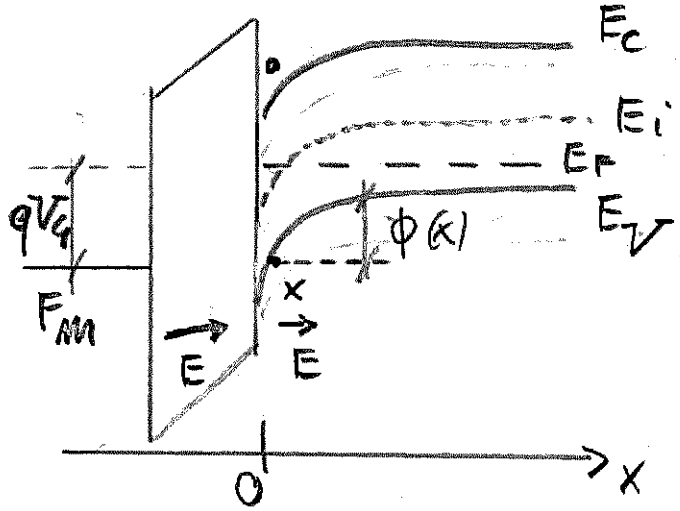

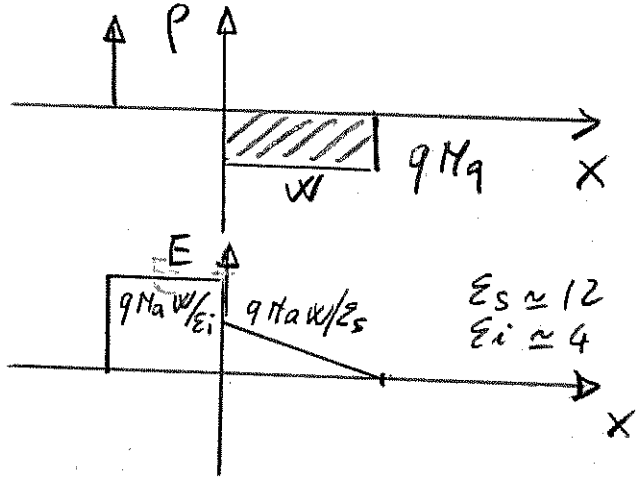

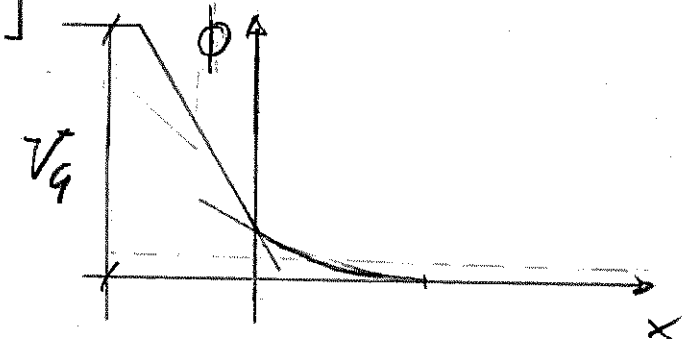

Threshold for Strong Inv.

$$\begin{cases} n_{[i-s]} = p_{bulk} = N_a \\ n_{[i-s]} = (n_i^2/N_a)\exp(q\phi_s/kT) \end{cases} \Rightarrow \phi_{s\,INV} \; ?$$

$\phi_s^{INV} = kT/q \ln(N_a^2/n_i^2) = 2\frac{kT}{q}\ln(N_a/n_i) \rightarrow$ depends on T and N_a

In the bulk

$$p = N_a = n_i \exp\left(\frac{E_i - E_F}{kT}\right)$$

$$E_i - E_F = kT \ln\left(\frac{N_a}{n_i}\right)$$

At the interface [i-s]

$$n = N_a$$

$$\phi_{IMV} = \frac{2kT}{q} \ln\left(\frac{N_a}{n_i}\right)$$

$$\Rightarrow E_i - E_F = q\,\frac{\phi_{IMV}}{2}$$

$$\phi_{IMV} = \frac{2(E_i - E_F)}{q}$$

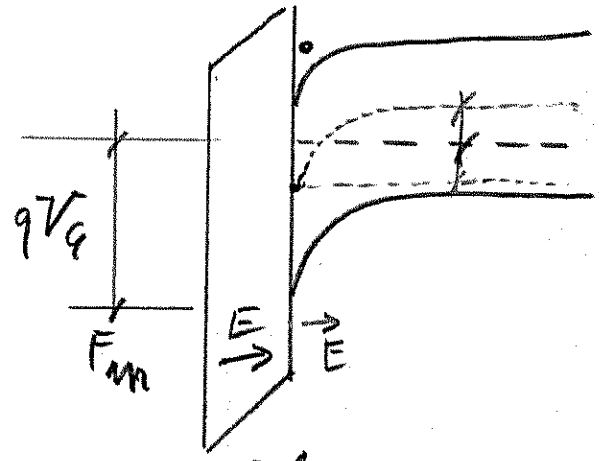

$$\phi_{IMV} = \overbrace{\frac{q N_a W_T}{\varepsilon_s}}^{E(0^+)} \frac{W_T}{2} \Rightarrow W_T = \sqrt{\frac{2\varepsilon_s \phi_{IMV}}{q N_a}}$$

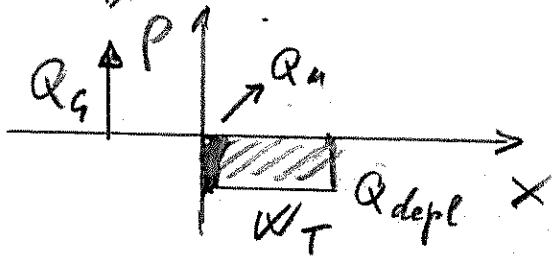

@ Threshold

$$V_T = V_i + \phi_{IMV} = \overbrace{\frac{q N_a W_T}{\varepsilon_i}}^{E_i} t_i + \phi_{IMV} = \frac{1}{C_i}\sqrt{2 q \varepsilon_s N_a \phi_{IMV}} + \phi_{IMV}$$

This sets V_T as a function of known parameters of the MOS capacitor

ϕ_{IMV} depends on doping and T